TSUGAMI
Rem Sales, LLC

BW129Z & BW209Z

CNC Precision Automatic Lathe

Speed, Accuracy, Rigidity

- 12 mm & 20 mm Capacity Swissturn
- 9-Axis Machining
- High Speed Spindle
- 28 tools
- Fanuc 31i-B CNC

THE RIGHT INGREDIENTS FOR SUCCESS

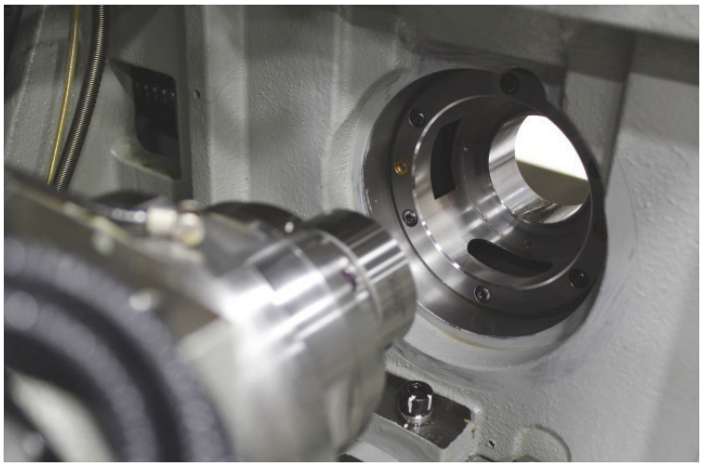

Chucker Convertible - in Minutes

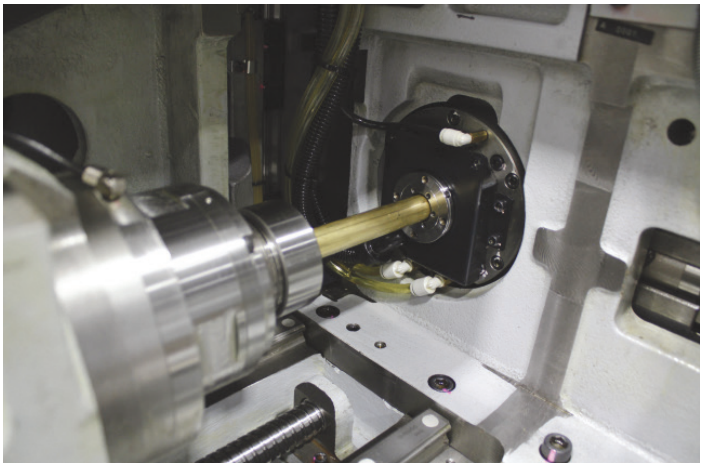

Servo Driven Guide Bushing

Capability

The Tsugami BW129Z / BW209Z allows you to perform highly complex front and back simultaneous machining, including, pinch turning, stitch drilling, balance milling, superimposed machining, as well as off-center drilling, off-center tapping, end-milling and cross drilling. **The machine also incorporates a Z3 movement on the main rear gang slide for multiple options in tooling and part processing**. Plus, with the live tools on the sub side with its Y-axis control, overlap capabilities mean more work is done internal to the part process. Cycle time can be significantly reduced using the BW129Z / BW209Z Y3 and Z3 axes and their various machining processing patterns.

Your BW129Z / BW209Z features a state of the art Fanuc 3-path control for low idle times and high speed processing. The horizontally opposed gang tool layout offers the shortest path tool to tool and therefore, the quickest possible chip to chip time. The BW129Z / BW209Z has Y-axis and live tooling on the sub spindle tool post allowing milling operations traditionally performed on the main spindle to be carried out on the sub spindle, internal to the part process. Other features include integral spindle motors and an integral motor driven guide bushing for the fastest possible acc/dec times and quick C-axis positioning.

Flexibility

At Tsugami, we realize that having the most capable machine available is only part of the requirement. In today's competitive global environment, your business can change daily. With the independent slide configuration, 3 tools in the cut provides optimal cycle time reduction.

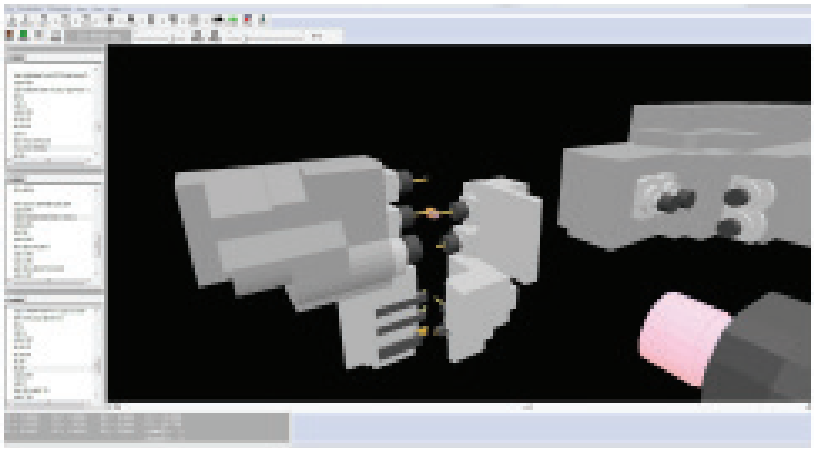

Abile Part Programming Software Included

Your Tsugami can be changed over in minutes. Adding a chucker kit allows you to convert your BW129Z/BW209Z from a Swissturn to a lathe. This allows you to run high-precision parts utilizing standard drawn barstock. Other benefits include shorter remnants, better concentricity, and more. This quick-change flexibility makes these machines ready to tackle whatever job comes in the door.

The machine features a wide opening door for easy access, right hand configuration, long headstock stroke for convenient access to the headstock collet and bushing, easy access to sub spindle tooling, and horizontal tools for ease of setting. The "Program Check Function", which allows new programs to be quickly and safely proven out, is included as standard.

Reliability

The BW129Z/BW209Z machines are built for the long haul. They feature rugged construction, belt free spindles, live tools, and servo driven guide bushings. Tsugami has the most rigid gang tool post in the industry due to its opposing rail slide construction. The machines are built on a heavy duty cast iron base, has thermally symmetrical construction, and features 0.1 micron resolution. This rigid platform allows for higher speeds and feeds and more accurately finished parts.

For extra peace of mind, the machine, motors, and control are covered by an industry leading two-year parts and service warranty.

WORK ZONES / MODULAR TOOLING

Cross tool spindle on the front/rear tool post.

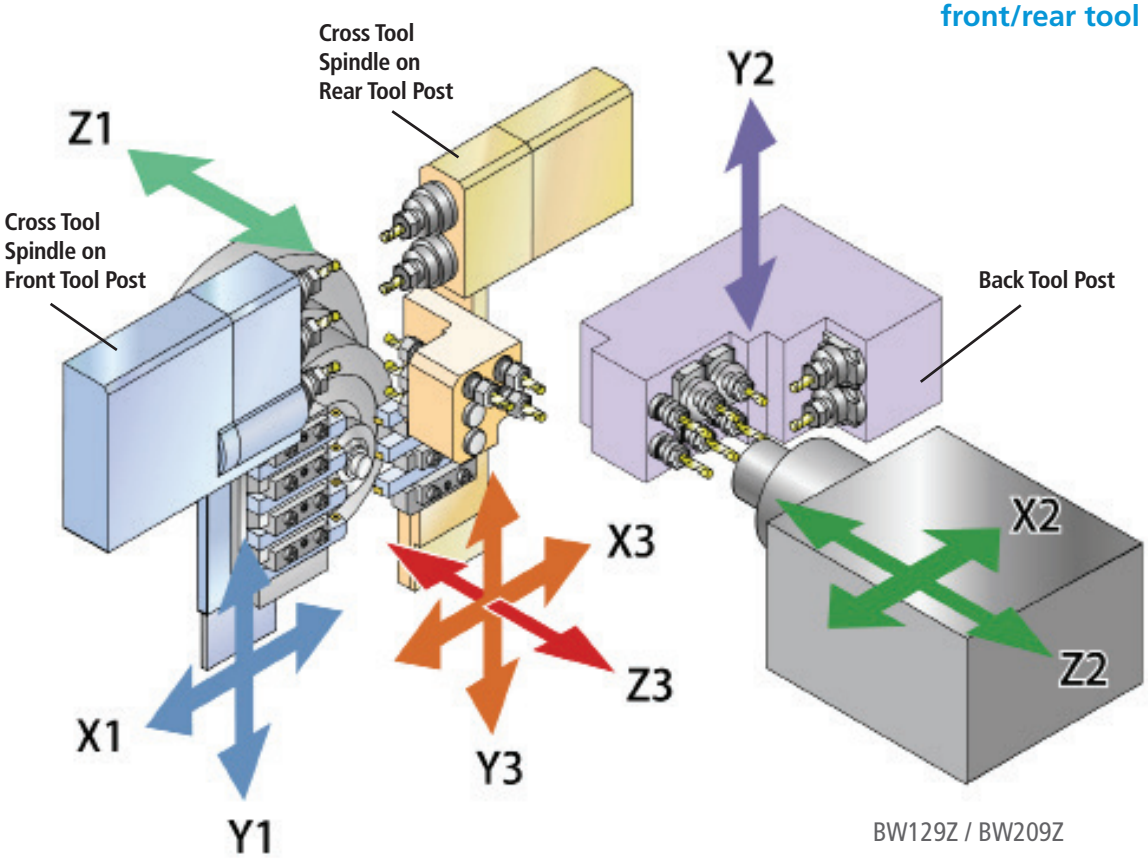

BW129Z / BW209Z

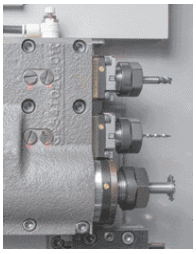

	BW129Z	BW209Z
Maximun Speed	8,000 rpm Note1	8,000 rpm Note1
3 spindles: Modular Type	2 spindles ER11 ø7 1spindle ER16 ø10	2 spindles ER16 ø10 1spindle ER20 ø13

(Note 1): Continuous rotation speed: 7,000 rpm

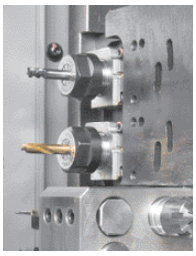

	BW129Z	BW209Z
Maximun Speed	8,000 rpm Note1	8,000 rpm Note1
2 spindles: Modular Type	2 spindles ER11 ø7	2 spindles ER16 ø10

(Note 1): Continuous rotation speed: 7,000 rpm

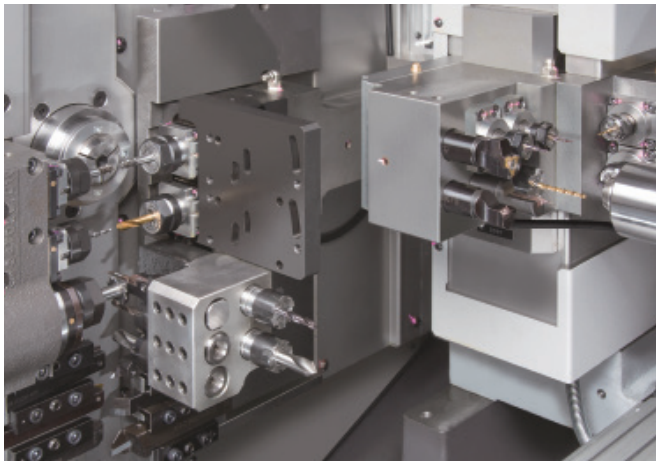

Simultaneous machining is possible by the cross drills on the independent-controlled gang tool posts

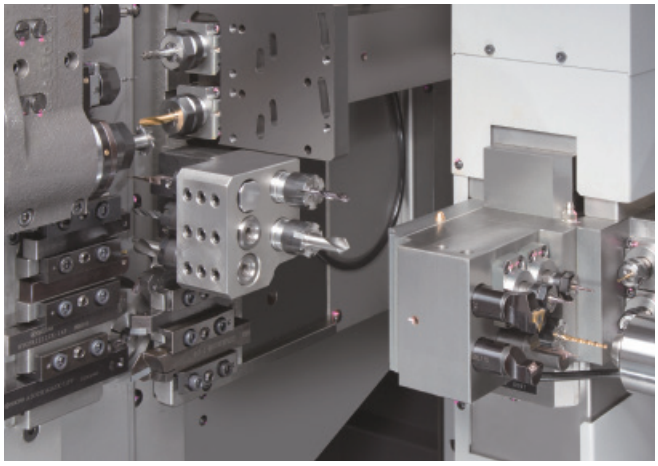

Balance turning capability by the independent-controlled opposed gang tool posts

Machining Patterns

Cycle time is shortened by diverse simultaneous processing.

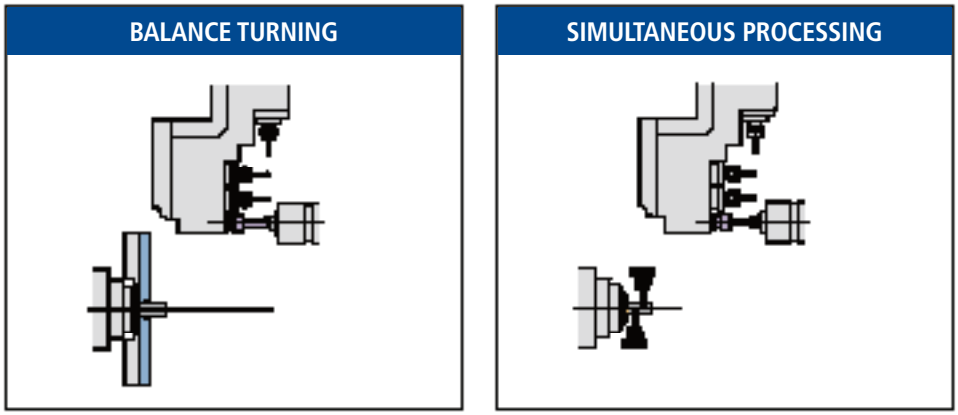

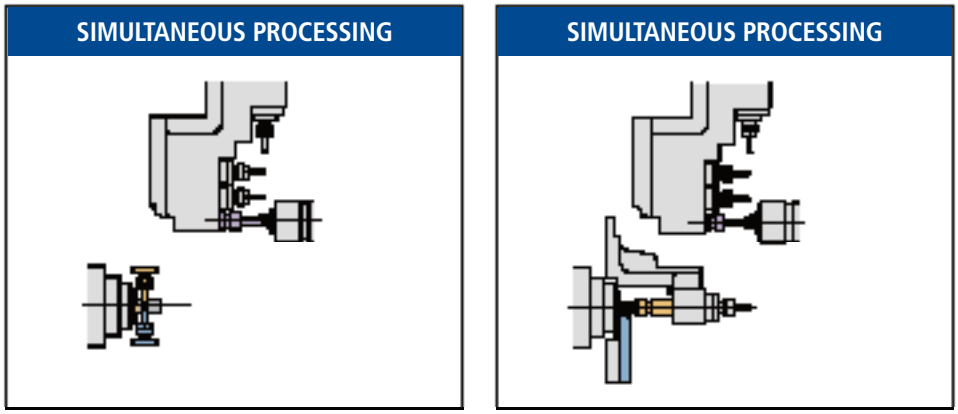

MACHINE STANDARD SPECIFICATIONS

	STANDARD SPECIFICATION	BW129Z	BW209Z
Machining Range	Barstock chucking diameter	Ø3 to Ø12 mm (.12 to .47 in.)	Ø3 to Ø20 mm (.12 to .79 in.)
	Max. machining length	210 mm (1.77 in.) (Stationary guide bushing), 80 mm (3.15 in.) (Carrier type rotary guide bushing) 170 mm (6.69 in.) (Direct-drive rotary guide bushing), 45 mm (1.77 in.) (Guide bush less)	
	Max. main spindle drilling diameter	Ø7 (.28 in.)	Ø10 (.39 in.)
	Max. main spindle tapping diameter	M6	M10
	Main spindle through ID	Ø16 mm (.63 in.)	Ø32.5 mm (1.27 in.)
	Max. back spindle chucking dia.	Ø12 mm (.47 in.)	Ø20 mm (.79 in.)
	Max. back spindle drilling diameter	Ø7 mm (.28 in.)	Ø8 mm (.31 in.)
	Max. back spindle tapping diameter	M8	
	Max. cross drilling diameter	Ø6 mm (.24 in.)	
	Max. cross tapping diameter	M5 x 0.8	
	Max. tool spindle slotting cutter dia.	Ø30 mm (1.18 in.)	Ø45 mm (1.77 in.)
	Max. back drilling diameter	Ø6 mm	
	Max. back tapping diameter	M5	
Machining Capability	Main Spindle Speed	200 to 12,000 rpm	200 to 10,000 rpm
	Back Spindle Speed	200 to 12,000 rpm	
	Rotary Guide Bushing Speed	200 to 8,000 min-1: Carrier type rotary guide bushing, 200 to 12,000 min-1: Direct-drive guidebushing	200 to 8,000 min-1: Carrier type rotary guide bushing, 200 to 10,000 min-1: Direct-drive guidebushing
	Cross Tool Spindle Speed	200 to 8,000 rpm min-1	
	Tool Size	.5 in x .5 in x 3.35 in (T04,T05,T06,T07,T16,T17,T18)	.5 in x .5 in x 3.35 in (T04,T05,T06,T07, T16,T17), .625 in x .625 in x 3.35 in (T18)
	Rapid Traverse Rate	32 m/min (Z1, Z2, X2) 24m/min (Y1, Y3) 15 m/min (Y2) 12 m/min (X1, X3, Z3)	
	Controlled axes (linear axes)	9	
Motors	Main spindle	1.5/2.2 kW	2.2/3.7 kW
	Back spindle	1.5/2.2kW	
	Axis (X1, Y1, Z1, X2, Y2, Z2, X3, Y3)	0.5 kW	
	Cross drill, tool spindle	1.0 kW	
	Back tool spindle	1.0 kW	
	Coolant pump	0.25 kW	
	Lubricating oil pump	3 W	
Other	Power Source Requirement	14.1 kVA	15.4 kVA
	Net Weight	2,900 kg / 6,393.4 lbs	
	Compressed Air Requirement	0.4 MPa or above	
	Air discharge rate	50 NL/min	
	Coolant Tank Capacity	120 L / 31.7 Gal	
	Width x depth x height	2,010 mm x 1,505 mm x 1,750 mm (79.13 in. X 59.25 in. X 68.90 in.)	

NC SPECIFICATIONS

ITEMS	BW129Z / BW209Z
NC Unit	Fanuc 31-iB
Controlled axes	X1,Y1,Z1,X2,Y2,Z2,X3,Y3,Z3,C1,C2
Least input increment	0.0001 mm (X1/X2/X3-axis in diameter)
Least command increment	0.0001 mm (X1/X2/X3-axis in diameter)
Maximum programmable value	±8 digits
Interpolation method	Linear, circular, helical, polar, cylindrical
Feedrate	1 to 6,000 mm/min
Feedrate override	0 to 150% in 10% increments
Dwell	G04 0 to 99999.99
Tool offsets	Sum of all paths: 192
ABS/INC command	X,Y,Z,C: absolute, U,V,W,H: Incremental
LCD/MDI	10.4″ color LCD
Display language	English
Part program storage size	Sum of all paths: 64 kbytes (equivalent to 160 m)
Registerable programs	Sum of all paths: 63
Miscellaneous functions	M5-digits
Spindle function	S5-digits
Tool function	T4-digits

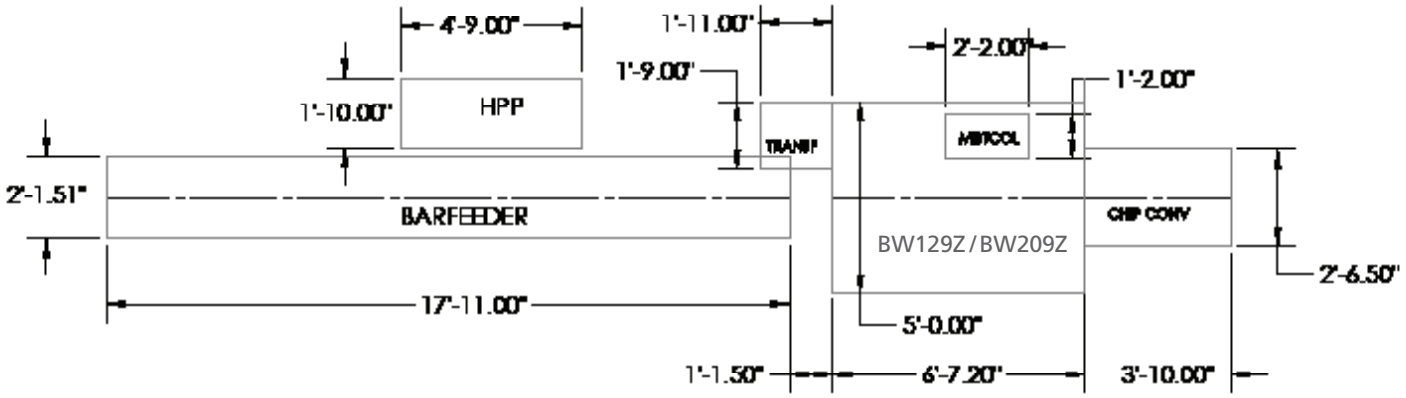

"Our local distributor and Rem Sales have been second to none at their sales, service and applications support. Our regional sales manager from Rem Sales stops in on a regular basis along with the team from our local distributor to make sure that jobs are running smoothly."

ROB REDDEN
Sales Engineering Manager, MultiSource Manufacturing

"The Tsugami machines that I run are amazing.
Best machines I have ever worked with."

SAMMUEL ADAMS
CNC Machinist, Smith & Nephew

DISTRIBUTION NETWORK

The Robert E. Morris Company
Serving: CT, MA, RI, NH, VT, ME, NY, NJ
www.robertemorris.com

Morris South
Serving: NC, SC, GA, VA, AL, MS, TN, AR, FL
www.morrissouth.com

Technical Equipment
Serving: OH, IN, KY
www.techequip.com

Morris Great Lakes
Serving: NY, PA, WV
www.morrisgreatlakes.com

Morris Midwest
Serving: MN, WI, IL,
MI upper peninsula, ND, SD
www.morrismidwest.com

Arizona CNC
Serving: AZ, NV
www.arizonacnc.com

EMEC Machine Tool, Inc.
Serving: Eastern Canada
www.emecmt.com

Morris Florida
Serving: FL
www.remsales.com

Network Machinery
Serving: MI
www.networkmachinery.com

Thomas Skinner
Serving: Western Canada
www.thomasskinner.com

Phillips Corporation
Serving: PA, NJ, DE, MD
www.phillipscorp.com

Ellison Technologies
Serving: CA, WA, OR, NV
www.ellisontechnologies.com

Hartwig, Inc.
Serving: MO, IL, IA, KS, CO, OK, TX, LA,
MT, UT, NM, ID, WY
www.hartwiginc.com

Protecnic de México, S.A de C.V.
Serving: Mexico
www.protecnic.com.mx

910 Day Hill Road, Windsor, CT 06095
860-687-3400 Phone | 860-687-3401 Fax | www.remsales.com | sales@remsales.com